CFD Pre-Processor for NPSH Analysis

COPY COMPLIANT to the original document resident on the computer system at the time of printing

Index

1. Purpose. 3
2. Scope. 3
3. Abbreviations. 3
4. General procedure: description. 3
4.1. Importing Mesh 4
4.2. Type of Analysis 5
4.3. Model Fluids 6
4.4. Boundary Conditions and Interfaces 9
4.5. Solver Control 13
4.6. Expression and Monitor 14
4.7. Setting files for batch mode 15
4.8. Setting for the “Head drop curve” 16
4.9. Summary of the setting 19
5. Acceptance criteria. 20
6. References 21
Annex A 22
Annex B: Pump type (*API STANDARD 610*) 28
Annex C 30

COPY COMPLIANT to the original document resident on the computer system at the time of printing

1. Purpose.

The document describes a guideline to realize a model of pump in a CFD environment to be simulated under cavitation conditions, with the aim of estimating the NPSH3%.

A specific example using ANSYS PRE POST environment is described in the Annex A.

2. Scope.

This procedure is applicable to any centrifugal pumps. It is used specifically for the first stage of the pump which is subject to the cavitation phenomenon.

The procedure is applicable for the Nova Milanese and La Spezia plants.

3. Abbreviations.

1ST		*First Stage model*
B.C.		*Boundary Condition*
CFD		*Computational fluid Dynamics*
Eta	*[%]*	*Efficiency*
H	*[m]*	*Head*
NPSH	*[m]*	*Net Positive Suction Head*
NPSH3%	*[m]*	*Net Positive Suction Head 3% (H decreases by 3% due to cavitation)*
NPSHA	*[m]*	*(Net Positive Suction Head Available)*
Nq or Ns		*Specific speed of the pump*
Q	*[m^3/h]*	*Flowrate*
SSS		*Suction Specific Speed*
SST		*Shear Stress Transport*
VOF		*Volume of Fluid*

4. General procedure: description.

The guideline provides general instructions for setting up a CFD analysis with the aim of performing a series of cavitating simulations and being able to estimate with good accuracy the NPSH3% through the "Head drop curve" method.

The type of pump model and analysis adopted for this guideline are:

- simplified model of the first stage 1ST

- steady state analysis

COPY COMPLIANT to the original document resident on the computer system at the time of printing

- multiphase water-vapour fluid (VOF method)

Compared to many other models and types of analysis discussed in similar guidelines this model does not require particular boundary conditions exported from the complete pump model; therefore, if the activity requires only a cavitating analysis it is sufficient to create only this model.

A general discussion is presented below, with the aim to provide the user with the necessary information and recommended criteria for setting a CFD model using general purpose tools of Pre-Processors (some examples are CFX PRE, Fluent, Open Foam, etc.).

4.1. Importing Mesh

Usually in the mesh import phase, regardless of the preprocessing tool, it is necessary to select the type of mesh or meshing tool, if required, and the measurement scale is the orientation with respect to the orthonormal reference system. It is always necessary to verify that the rotation axis of the blade passage is always coincident with one of the axes of the orthonormal reference system.

Whenever the numerical analysis faces with an assembly of several hydraulic fluid domains special care must be done during the spatial connection between the numerical components:

- Each single component must be spatially aligned to the neighbor in order to eliminate any clearance
- The sense of rotation of impeller or other components must be checked. If some inverse rotation is detected, then the components must be properly mirrored
- Whenever a double suction pump is analyzed, special care must be taken during the realization of the whole impeller double suction domain. Usually, the mesh of the impeller is referred to a single vane of a single suction, so, to create the whole double suction impeller the following actions are required:
    - Create the domain of each side of the impeller by copying the vane domain in the tangential direction for the number of blades. Check if the mesh and the number of blades is conformal.
    - Mirror the domain of the whole impeller side to realize the complete double suction impeller component. No mesh overlap in the symmetry plane is admitted.

COPY COMPLIANT to the original document resident on the computer system at the time of printing

- If the impeller blades are staggered in the pitchwise direction, a rotational offset of the blades must be applied on a side of the assembly, considering the staggering angle defined in the reference hydraulic design.
- If the impeller is symmetric the internal disk of the impeller has a diameter lower than the blade trailing edge and the final part of the blades in streamwise direction are connected together. In this case a split of the hub surface must be created, to divide the internal disk surface from the symmetry plane.

If there are no obvious reasons that can compromise the evaluation of NPSH3%, such as:

- a probable influence of the diffuser or the volute on the flow field developed upstream of impeller, in particular at the inlet of the impeller.
- a substantial axisymmetric between the two sides of a double-inlet suction.

It is not necessary to create a first stage complete with all his components, but three fluid domains are sufficient:

- suction domain (if the suction is double inlet, it is possible to consider only one half)
- leakage domain
- domain of a single impeller blade vane

This last specific simplified model is presented in this guideline.

4.2. Type of Analysis

For these models a stationary multi-phase simulation is required, even if it is known that the simulation of a pump in operating conditions is clearly of a transient type, the reasons are:

- there is a relative motion between the rotor and stator components.
- there are turbulent phenomena that originate within the fluid flow field.

Although a non-steady-state analysis with a complete pump represents the most complete simulation, previous experience has shown that the accuracy benefits of results are marginal and do not justify the onerous increase in computational costs.

COPY COMPLIANT to the original document resident on the computer system at the time of printing

The reason is because in the fluid field of the first stage of a pump, no transient phenomena should be observed upstream of the impeller (at the inlet of the impeller is where the first formation of cavitation bubbles happens); therefore, adopting a steady state simulation is reasonable.

4.3. Model Fluids

Domains are regions of space in which the equations of fluid flow or heat transfer are solved and are created from a list of Assemblies, 3D primitive regions and/or 3D composite regions that are associated with a volume of an imported mesh.

In some cases, separate domains must be connected via a domain interface, while in other cases, no interface is required, or a default interface is created and is suitable.

Within fluid, internal 3D regions can be assigned to a subdomain and boundary conditions can be applied to any bounding surface of a 3D region that is included in a domain.

The Solver uses the concept of domains to define the region of the fluid, the type, the properties, the morphology and the equations applied on it; are described below:

Material proprieties of fluid

The fluid processed during the simulation must be correctly defined. Depending on the calculation type that will be performed, several fluid properties must be set.
Table 2 shows the physical properties of water and the water-vapour (and one example of air) necessary and sufficient to characterize the fluid in a thermo-fluid dynamic simulation:

Example of fluid			
Material proprieties	Water	Air	Water Vapour
Thermodynamics state	liquid	gas	gas
Ref. temperature [°C]	25	25	25
Ref. pressure [bar]	1	1	0.03169
Ref. spec enthalpy [J/kg]	0	0	-13424249
Ref. spec entropy [J/(kg*K)]	0	0	10475.125
molar mass [kg/kmol]	18.02	28.96	18.02

COPY COMPLIANT to the original document resident on the computer system at the time of printing

density [kg/m^3]	997	1.185	0.022308
Specific heat capacity [J/(kg*K)]	4181.7	1004.4	1911.6
Dynamic Viscosity [kg/(m*s)]	0.0008899	0.00001831	0.0000098626
Thermal Conductivity [W/(m*K)]	0.6069	0.0261	0.01854
thermal expansivity [1/K]	0.000257	0.003356	0.003356

Table 1 : Material proprieties

Usually, each solver already has a library of chemical-physical properties of materials; if the fluid you want to model does not exist, you can create it within the library.

In our case, the fluid pair that will be simulated is water and water-vapour, as reported in the first and third column of the table.

Morphology of fluid

Morphology is used to describe the connectivity or distribution of the fluid, in fact it can take different forms, in the simplest case as a single continuous fluid (homogeneous and uniform in space), or as a dispersed fluid, that is a fluid that transports and enters with a dispersed solid or gaseous phase or vice versa.

Generally, the morphology used for the fluid pair water-vapour during the pump simulation is continuous and homogeneous. The condition of homogeneity imposed for the two different fluid phases implies that they share the same velocity field and the same thermal field.
This setting helps to reduce the computational effort.

Reference Pressure of model

In this section it is necessary to set the absolute reference pressure level of the entire physical system.

The value to be set is equal to Pref=1atm, this represents the reference pressure for all pressures imposed as boundary conditions and subsequently simulated.

COPY COMPLIANT to the original document resident on the computer system at the time of printing

Buoyancy Model

For flows where gravity is important, it is necessary to include the buoyancy term.

It is therefore necessary to insert the gravitational components in the x, y and z directions with respect to the coordinate system for which the domain is oriented.

The buoyancy model is significant for slow and multiphase flows where the natural convection term is predominant, in our case it is not necessary to insert it.

Domain Motion

In the pump model it is necessary to set the rotation for all the fluid domains that are placed in rotation (impeller domains), therefore it is necessary to define the angular velocity of the pump and the rotation axis of the system.
While all the remaining fluid domains that do not undergo a rotation imposed with respect to the rotation axis of the global reference system of the system it is necessary to set the stationarity condition.

Equation of Heat Transfer

The exchange of work between the impeller and the fluid occurs at almost constant temperature; in the fluid model it is therefore necessary to set the isothermal transformation condition.
These equations must be used only if a thermal analysis on the pump is required

Turbulence of model

Turbulence can be modelled using a variety of approaches, including DNS (Direct Numerical Simulation), LES (Large Eddy Simulation), and RANS (Reynolds-averaged Navier-Stokes) modelling.

In our case we set the turbulence model SST (Shear Stress Transport); this model is part of RANS approach, it is widely used in industry, particularly in turbomachinery.

COPY COMPLIANT to the original document resident on the computer system at the time of printing

Fluid pair model

Typical model used for the cavitating analyses is based on Raileigh Plesset equations
In this section you need to enable the Cavitation model and define the saturation pressure.
The value of the saturation pressure depends on the fluid temperature (see Annex C), in general if we consider water at 25°C then Pvap=3167 [Pascal].
It is important to consider that if the fluid temperature is different, it is necessary to re-evaluate also the "dynamic viscosity" and the "density" of both the two phases (see Annex C).

4.4. Boundary Conditions and Interfaces

Boundary conditions must be applied to all the bounding surface in our domain (see Figure 1); the boundary conditions can be:

- Inlet
  - Flow rate
  - Velocity distribution
- Outlet
  - Pressure
- Opening
- Wall
- Symmetry plane

Instead, in the internal connection surfaces between fluid domains, it is necessary to select the names of the two or more side of domains and the type of interface, which can be:

- General connection
- Sliding interfaces (Stage (mixing-plane))
- Periodic (Rotational)

Interfaces deserve a more in-depth treatment because the exchange of information through it must occur either if the two meshes are of different types (for example a hexahedral mesh with a tetrahedral one) either if the two fluid domains are rotor and stator. Thanks to numerical algorithms and multiple reference systems, the treatment of interface flows is completely implicit and

COPY COMPLIANT to the original document resident on the computer system at the time of printing

conservative in terms of mass, momentum, energy, therefore without any penalty in terms of robustness or convergence speed.

In our case the following types of interfaces could be used in our domains:

-“Stage” or “mixing plane”: are simple interfaces that generate an averaged value of the fluid dynamics variables between the interfaces. It’s the best way to speed up the simulation of pump stages because it requires only one vane of the rotating part and one vane of the static part, reducing the computational grid and consequently the computational effort.

-“Periodic”: Rotational periodicity can be used in impellers and bowls (of vertical pumps) when you want to simulate a single vane rather than the entire impeller or diffuser.

- “General Connection” between two static domains.

In the following example in Figure 1 a first stage of BB5 pump model (1ST) is shown.

Colour blue: suction domain

Colour pink: leakage domain

Colour red: vane impeller domain

Figure 1 : Example of model 1ST pump BB5

COPY COMPLIANT to the original document resident on the computer system at the time of printing

Static wall	Rotor wall	Inlet Outlet
	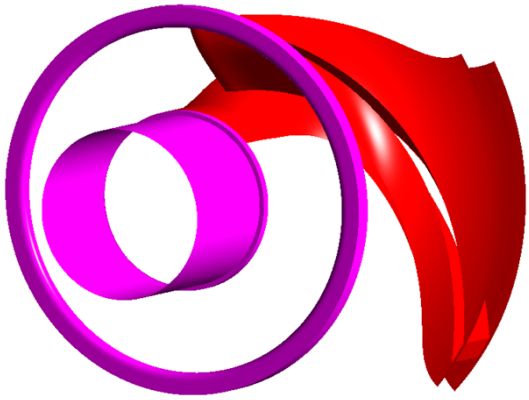	

Figure 2 : patch where to impose le B.C.

Figure 2 shows the different patches of the different fluid domains for which to impose the boundary conditions.

Table 3 shows the operating conditions and the boundary conditions to be applied on the domain patches showed in Figure 2.

Operating Condition	Assignment B.C.	Color patch
Rotational Speed [rpm]	Blade, hub, shroud, shaft	red and pink (column 2)
Total pressure [Pa]	Inlet	blue at inlet (column 3)
Mass flow rate [kg/s]	Outlet	red at outlet (column 3)
Wall Roughness [micron]	Wall casing	blue and pink (column 1)

Table 2 : Assignment B.C.

COPY COMPLIANT to the original document resident on the computer system at the time of printing

The roughness value depends on the type of manufacturing, that is, whether the different component of the pump is created starting from a mechanical casting or whether they are made entirely with mechanical processing (such as by means of numerically controlled precision machines):

- From sand casting of impeller with external diameter lower than 600mm: Ra 6.3 (8 micron)
- From sand casting process of impeller with external diameter greater than 600mm Ra 12.5 (15micron)
- From sand casting process of casing Ra 25 (30micron)
- From ceramic or investment casting process or CNC machined: smooth roughness

It is important to note that since we are preparing a simulation of a single vane of impeller, the mass flow rate will be set equal mass flow rate of the pump divided by the number of impeller blades; furthermore, to consider the wear ring leakage mass flow rate, it is possible to add it to the mass flow rate of the vane, through a preliminary calculation or from literature [1].

Some detailed settings of the Inlet B.C are the subsonic flow regime, the normal flow direction and the turbulent intensity equal to 5%.

For the same reasons it is necessary to set the rotational periodicity condition between periodic surfaces shown in Table 4 with the yellow color.

Periodicity of vanes for impeller	Periodicity of single vane
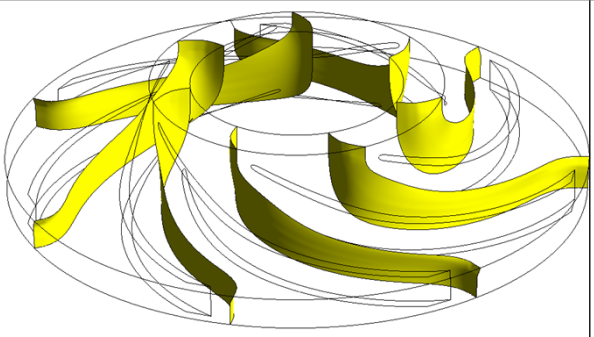	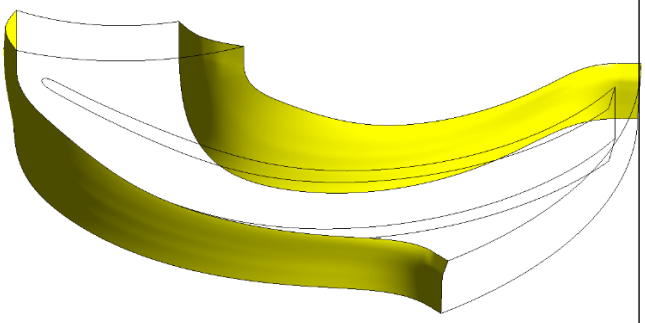

Table 3 : Interface rotational periodicity

COPY COMPLIANT to the original document resident on the computer system at the time of printing

While at the interface between the leakage and the vane impeller input it is necessary to set the "mixing-plane" condition.

4.5. Solver Control

To solve a fluid dynamics simulation, the Navier-Stokes equations are used, these are a set of coupled partial differential equations that take into account the continuity equation, the moment and the energy.

Through the use of CFD it is possible to solve these equations numerically using discretized volumes and time intervals.

The choice of the discretization of the fluid volume occurs in the previous meshing phase, and once the mesh is created the dimensions of the finite volumes are fixed, while the time interval and its management are set within the Solver, the main choice falls on the type of numerical scheme, first order, second order or second order + up-wind.

In our case, since we are using a stationary simulation, a first-order scheme is sufficient.

In the steady state cases the solver applies a false time step as a means to under-relax the equations while they iterate towards the final solution.

Convergence Control: steady state

In the setting section where convergence is checked, two approaches can be adopted:

- the first approach is based on setting a fixed number of interactions for which it is assumed that the state of convergence has arrived at a good solution.

- the second approach is instead to monitor in real time the state of convergence through the so-called residues, then a minimum residue value is set for which the simulation must converge.

In our case, it is preferable to adopt the first approach since from previous experiences it has been found that the solution arrives at an acceptable state of convergence at 1500 iterations.

COPY COMPLIANT to the original document resident on the computer system at the time of printing

On the other hand, if activities are required with pumps connected to very long suction ducts, it is necessary to increase the number of iterations; its value depends on the case, therefore the number of iterations is increased until the pressure drops in the duct reach the convergence state.

The management of the time scale can be multiple and depending on the type of Solver, the technique more convenient to adopt the "Auto Timescale" function.

4.6. Expression and Monitor

Within the solver is an "output control" panel that allows you to manage how files are written by the solver; you can control which variables will be written to the steady results files and how often the files will be created.

Monitoring data can also be displayed in real-time, so you can monitor and track the progress of the solution; this allows you to examine the results before the solution is fully converged.

Solvers usually also allow for back-up saves, which can be loaded into the post-processing section for examination.

Since all monitored variables undergo temporal fluctuations due to numerical instability (and turbulent un-stationary phenomena for unsteady simulation), it is always necessary to evaluate the convergence value by averaging the last range that falls within the ±1% convergence band.

There are different reasons for evaluating the "time-invariant" variables of a stationary simulation, since the fluctuations are due only to numerical instability.
As previously stated from previous company experiences, the iterations adopted are 1500, while the iterations for which to make the average are the last 100.

In addition to the "residues" and the default variables, it is possible to set predefined expressions that can be monitored during the simulation progress.

An example of expressions is shown in Figure 3.

COPY COMPLIANT to the original document resident on the computer system at the time of printing

```
LIBRARY:
 CEL:
  &replace EXPRESSIONS:
   AlfaInImp1 = areaAve(alfa)@ingresso_girante_1stadio Side 2
   Cm = (Cr^2+ Velocity in Stn Frame u^2)^0.5
   CmTrn = (CrTrn^2+ Velocity in Stn Frame u.Trnavg^2)^0.5
   Cr = (Velocity in Stn Frame w*z+Velocity in Stn Frame v*y)/raggio
   CrTrn = (Velocity in Stn Frame w.Trnavg*z+Velocity in Stn Frame v.Trnavg*y)/raggio
   Cteta = (Velocity in Stn Frame w*y-Velocity in Stn Frame v*z)/raggio
   CtetaTrn = (Velocity in Stn Frame w.Trnavg*y-Velocity in Stn Frame v.Trnavg*z)/raggio
   ForceX = (force_x()@Hub_Shroud_1stadio+force_x()@blade_girante_1stadio)*5+force_x()@Wall_rot_leak
   ForceX Imp1 = (force_x()@Hub_Shroud_1stadio+force_x()@blade_girante_1stadio)*5
   ForceY = (force_y()@Hub_Shroud_1stadio+force_y()@blade_girante_1stadio)*5+force_y()@Wall_rot_leak
   ForceZ = (force_z()@Hub_Shroud_1stadio+force_z()@blade_girante_1stadio)*5+force_z()@Wall_rot_leak
   Himp1 = (areaAve(Total Pressure in Stn Frame)@REGION:Passage OUTFLOW 2-areaAve(Total Pressure in Stn Frame)@ingresso_girante_1stadio Side 2)/(997*g)
   LossesAsp = (areaAve(Total Pressure in Stn Frame)@asp2leak Side 1-areaAve(Total Pressure in Stn Frame)@Inlet)/(997*g)
   Torque Vent = torque_x()@Wall_rot_leak
   TorqueX Imp1 = torque_x()@Hub_Shroud_1stadio+torque_x()@blade_girante_1stadio
   Total Head = (areaAve(Total Pressure in Stn Frame)@OUTLET-areaAve(Total Pressure in Stn Frame)@Inlet)/(997*g)
   alfa = atan(Cteta/Cm)
   alfaTrn = atan(CtetaTrn/CmTrn)
   raggio = (z^2+y^2)^0.5
  END
 END
END
```

Figure 3 : Example Expression of model pump BB5 3 stages

The main variable of interest is the Head of impeller Himp; this variable will be used to graph the "Head drop curve".

Many others can be inserted and monitored; the number and their complexity depend on the complexity of the pump model and the analysis activity, an example of other variables monitored are:

- Torque absorbed by a vane of impeller (without o with disk, it depends on how the leakage was modelled)
- losses static of suction
- forces applied on the impeller respect to the axes of the global reference system
- Angle of pre-rotation at the inlet of impeller

4.7. Setting files for batch mode

Batch mode operation is explained in [4] that must be used as reference whenever a simulation campaign in batch mode is performed

For sake of clarity a brief explanation is summarized below

During the redesign and optimization phase of a particular hydraulic pump component, there is usually a tendency to repeat the preparation phases of the pump model and its setting.

COPY COMPLIANT to the original document resident on the computer system at the time of printing

Since the investigation concerns the single component, it is possible to prepare a series of modifications, chosen at priori, on the main geometric parameters that characterize the geometry of the component of interest.
Following this logic and working method, the tool builders have specifically created batch files with the aim of automating and speeding up this preparation phase.

Taking the CFX tool as a particular example, it is possible to create two files, listed below:

CCL file: it contains the setting created in the current state at the moment in which this file is saved. Therefore, in the initial preparation phase of the model, it is possible to 1) import the new meshes 2) move, rotate, mirror for a correct position of the component 3) load the previously saved ccl 4) Assign mesh locations to the domains and boundary conditions; in this way is possible to obtain the same model but with different geometries and meshes.

CSE file: by enabling the "recording session" option at the start the model preparation phase, it is possible to record all the instructions executed during this phase, therefore including also the previous steps 1) 2) and 4). At the end of recording session is possible to save a file called .cse. Therefore, using this batch allows you to automate the generation of .def file completely overcoming the preparation phase of the model.

4.8. Setting for the "Head drop curve"

Before describing the standard method adopted for the realization of a "Head Drop Curve" it is necessary to define two variables of interest and their formulation:

- NPSH (Net Positive Suction Head)

$$NPSH = \frac{Pressure_{tot_{inlet_{suction}}}[Pa] - Pressure\ Vapour[Pa]}{density\ water\left[\frac{kg}{m3}\right] * gravitational\ acceletation[\frac{m}{s2}]}$$

$$Pressure\ Vapour\ at\ 25°C = 3167\ [Pa]$$

$$density\ water\ at\ 25°C = 997\left[\frac{kg}{m3}\right]$$

COPY COMPLIANT to the original document resident on the computer system at the time of printing

$$gravitational\ acceletation = 9.81\ [\frac{m}{s2}]$$

- NPSH3% (Net Positive Suction Head 3% (H decreases by 3% due to cavitation))
- NPSHA (Net Positive Suction Head Available)
- SSS (Suction Specific Speed)

$$SSS = speed\ shaft\ [rpm] * \frac{(Mass\ Flow\ Impeller\ [\frac{m3}{s}]|@bep)\text{^}0.5}{(NPSH\ [m])\text{^}0.75}$$

The criterion adopted to create the "Head Drop Curve" consists in progressively reducing the Total Pressure at the suction's inlet and measuring the Head for each of drop point respectively.
To reduce calculation times, it is necessary to define a limited number of drop points.

The sequence of the points and the logic of construction of the curve is reported in the following table (see Table 4):

n	Set simulation	PressureTOT_ inlet_suction [Pa]	NPSH [m]	SSS	Head [m]	Head [%]
1	NO CAVITATION (only water)	1 000 000	-	-	measure	100%
2	CAVITATION (multi-phase)	1 000 000	101.9	formula	measure	100%
3	CAVITATION (multi-phase)	formula	NPSHA	formula	measure	formula
4	CAVITATION (multi-phase)	formula	formula	180	measure	formula
5	CAVITATION (multi-phase)	formula	formula	200	measure	formula
6	CAVITATION (multi-phase)	formula	formula	220	measure	formula
7	CAVITATION (multi-phase)	formula	formula	240	measure	formula

Table 4 : construction logic of the "Head Drop Curve"

COPY COMPLIANT to the original document resident on the computer system at the time of printing

The first calculation (1) has only the purpose of correctly initializing the first cavitating calculation.
In the first cavitating calculation (2) a Ptot value of 1000000 [Pa] is always set, because we want to measure 100% of the Head without cavitation bubbles forming.
In the second cavitating calculation (3) a Ptot value is set for which we obtain the required NPSHA value from the formula; in this way we can understand in advance whether the NPSHA is will be respected or not.
Points 4 and next are set so that the Ptot determines growing SSS values around 200.

COPY COMPLIANT to the original document resident on the computer system at the time of printing

4.9. Summary of the setting

The following table Table 6 summarizes the setting to be set for this SOP:

Type of Analysis	Steady State
Model Fluid	• Water-Vapour at 25°C (with his properties, see Table 2 and ANNEX C) • Morphology: continuous fluid • Reference Pressure: 1 atm • Buoyancy model: not buoyant • Domain Motion: rotation equal to rotor speed • Eq. Heat Transfer: isothermal • Turbulence Model: SST • Cavitation model, Saturation Pressure = 3167 [Pa]
Boundary Conditions	• Inlet: Total Pressure [Pa]; subsonic flow regime; normal flow direction; Turbulence Intensity 5% @inlet domain • Outlet: Mass flow rate [kg/s] @outlet domain • Wall rotating: speed rotation [rpm] wall roughness [micron] @hub, shroud, blade domain wall roughness [micron] @ wall casing domain • Interface: General Connection, Mixing Plane, Periodic
Solver Control	• First-order scheme • Max. iteration convergence control: 1500 (the last 100 for the average correct value) • Timescale control: Auto Timescale (length scale option: conservative, timescale factor 1)
Expressions and monitor	• Head impeller • Torque impellers (optional) • Angle of pre-rotation at the inlet of impeller in the non-cavitating simulation (optional)

Table 5 : Setting

COPY COMPLIANT to the original document resident on the computer system at the time of printing

5. Acceptance criteria.

This procedure is applicable for any geometry of impeller, suction, cross-over, volute and diffuser (Table 5, Table 6).

In the following tables are described the different typologies of rotor and static component which constitute a centrifugal pump:

Type impeller

Component or feature	Radial	Semi-axial	Axial
(A) Impeller form: Characteristic: flow direction at impeller exit			
(B) Impeller type	Closed (shrouded) 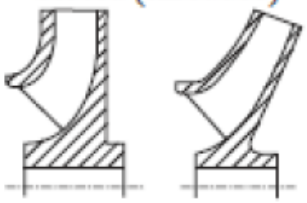	Semi-open	Open 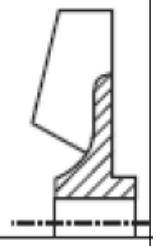

Table 6 : Type of geometry impeller [1]

Type suction casings			
Barrel pump (radial split)		Double suction (axial split)	
anulus	Spiral shaped	asymmetrical	quasi-symmetrical
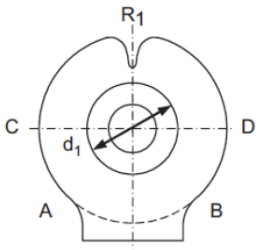	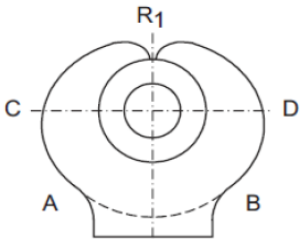	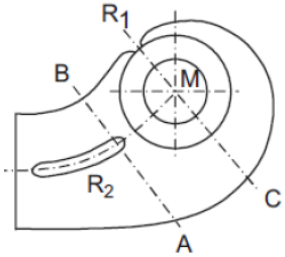	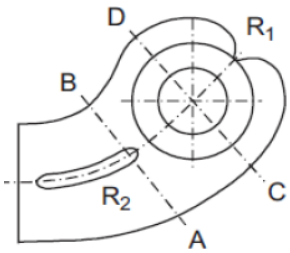

Table 7 : Type of geometry suction [1]

By the type of pump will be necessary to work on different composition of this part of pump.

COPY COMPLIANT to the original document resident on the computer system at the time of printing

6. References

- *[1] Gulich "Centrifugal Pumps" ,4th.ed.*
- *[2] Ansys User Manual*
- *[3] https://www.cfd-online.com/*
- *[4] SOP 517 "Running CFD in batch mode"*

COPY COMPLIANT to the original document resident on the computer system at the time of printing

Annex A

This section summarizes the main steps to be able to set up an example of pump model using the CFX Solver tool in the ANSYS environment:

Preparation of the non-cavitating simulation ((1) see Table 4)

It has the same setting described in the SOP "CFD Pre-Processor for steady state analysis"

Preparation of the cavitating simulation ((2)(3)(4)(5)(6)(7) see Table 4)

It has the same setting described in the SOP "CFD Pre-Processor for steady state analysis", except for the following settings listed below:

- Add in the material library the Vapour phase with its respective physical properties (see Figure 4)

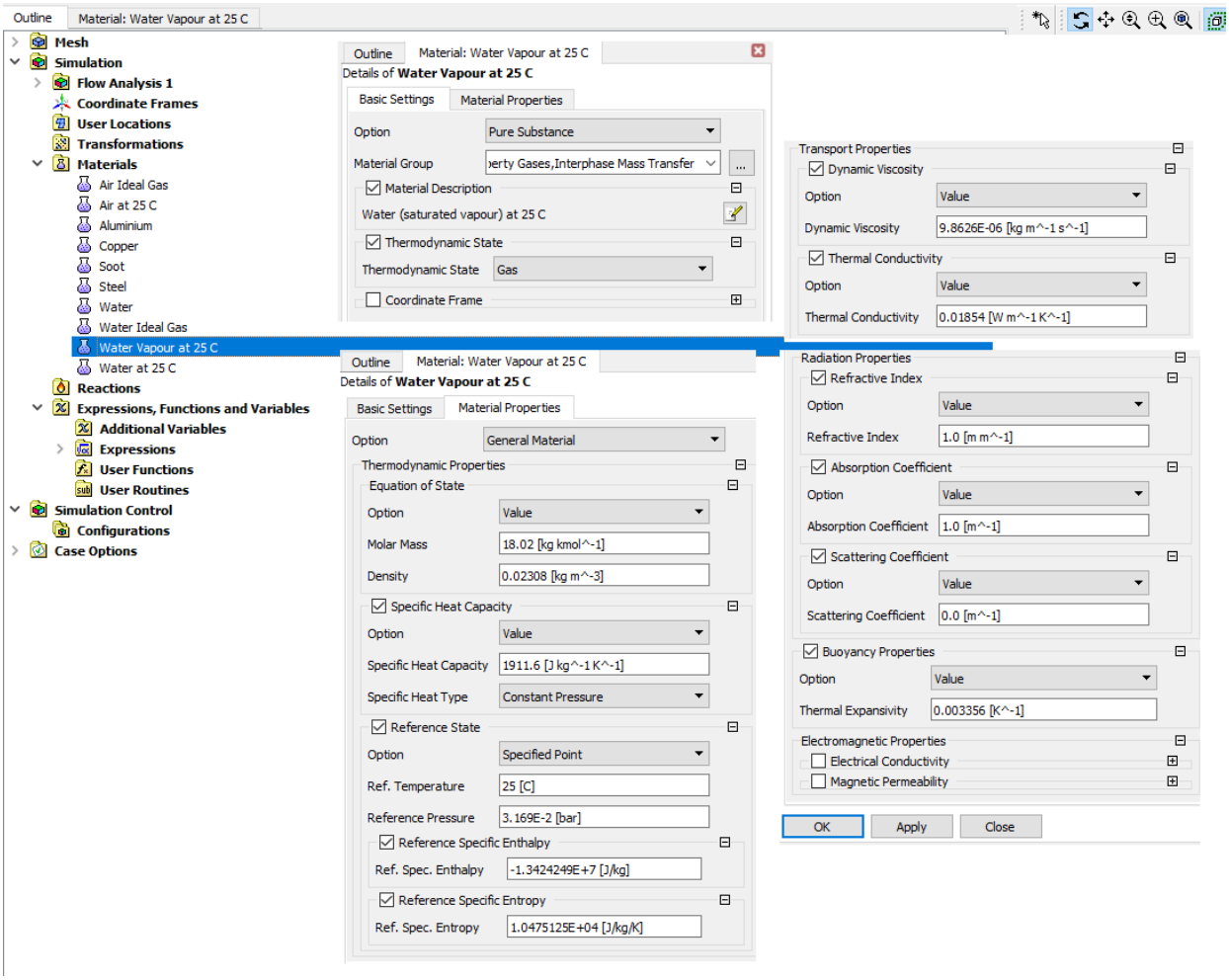

Figure 4 : Setting Vapour phase proprieties

COPY COMPLIANT to the original document resident on the computer system at the time of printing

- Realize the fluid model setting as shown in the figure, then insert the vapour phase, the homogeneity condition of the fluid couple and the cavitation model with the relative saturation pressure into the fluid domain (see Figure 5)

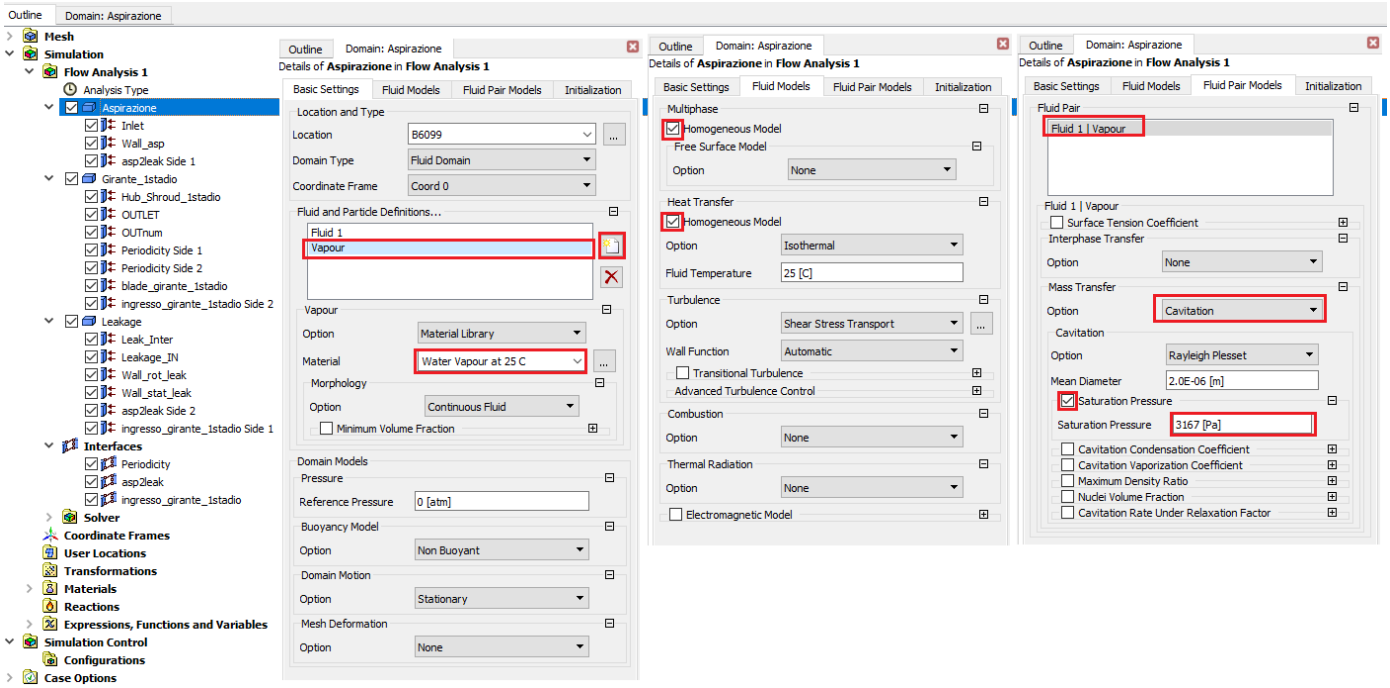

Figure 5 : Setting Model Fluid

- Set the Volume Fraction in the Inlet boundary condition as shown in Figure 6.

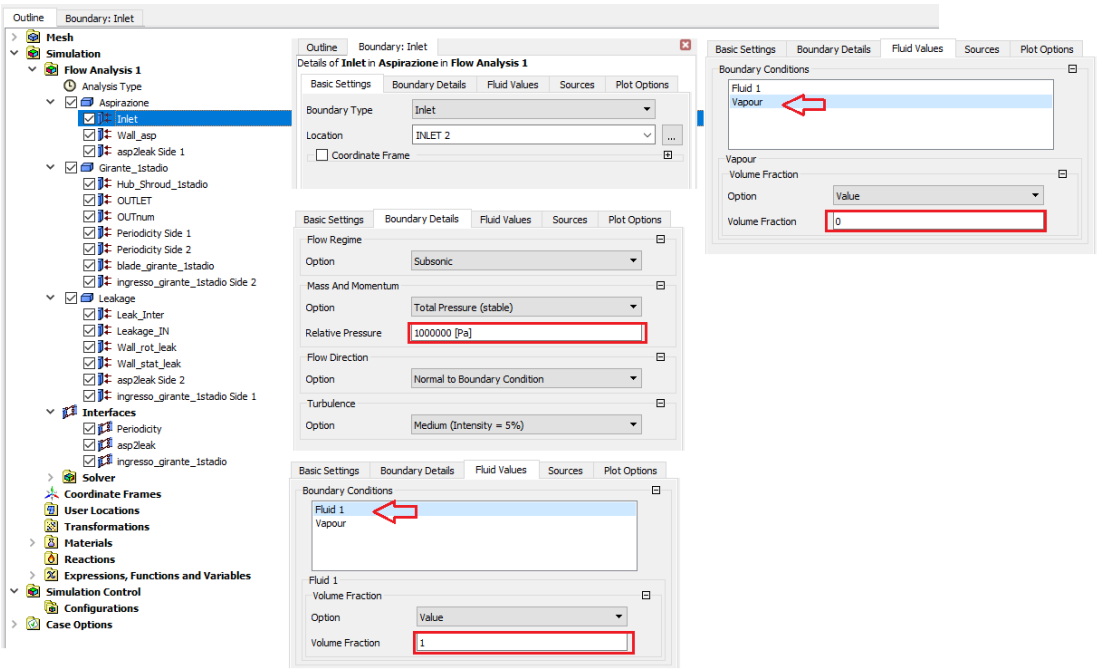

Figure 6 : Setting Inlet

COPY COMPLIANT to the original document resident on the computer system at the time of printing

- Create the outlet setting as shown in the figure, re-membering to set the pump flow rate divided by the number of impeller vanes (see Figure 7).

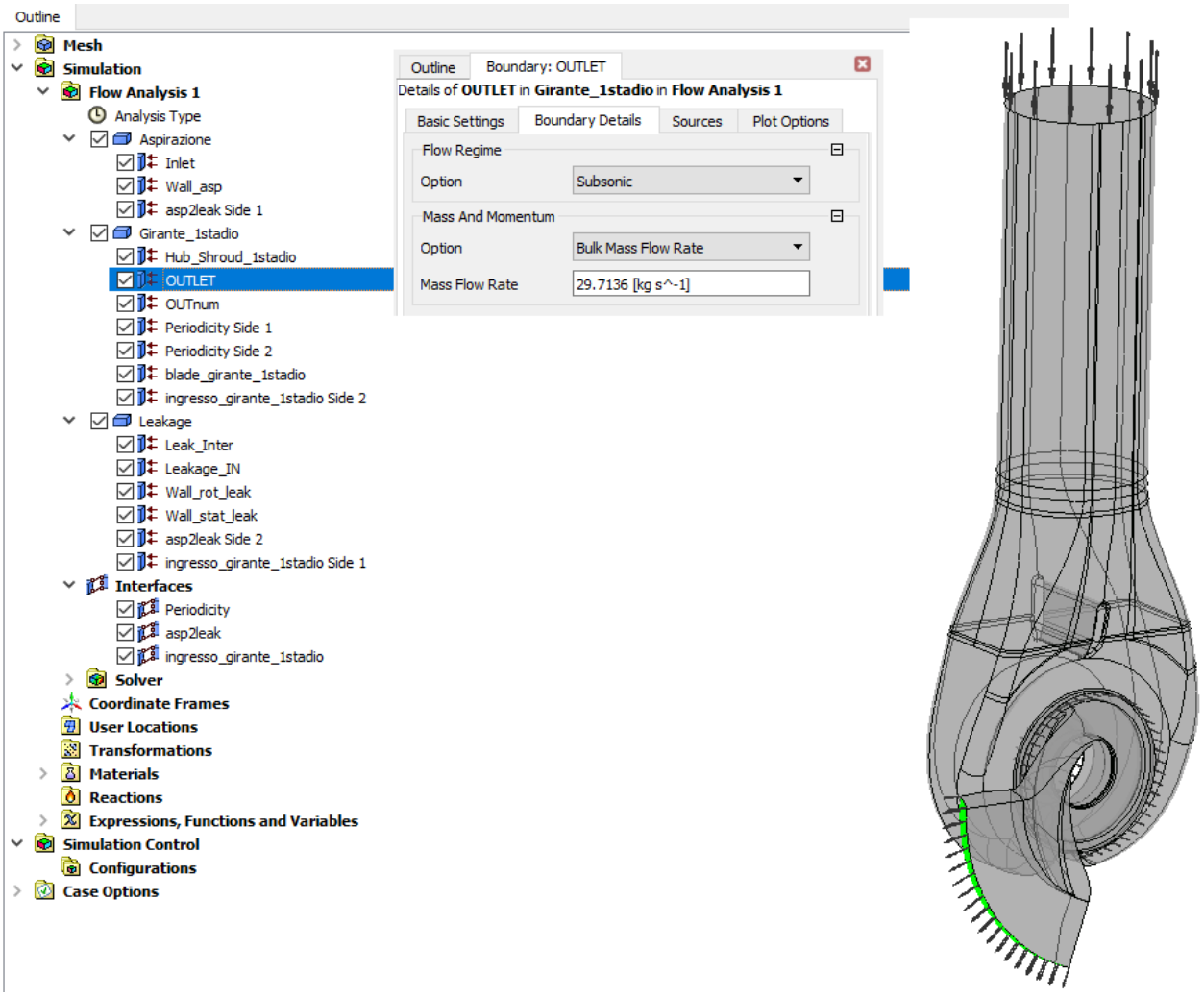

Figure 7 : Setting Outlet

COPY COMPLIANT to the original document resident on the computer system at the time of printing

- Set the Interface “stage (mixing-plane)” between leakage and impeller vane inlet as shown in Figure 8, remembering to set for the impeller side an angle equal to 360 degrees divided by the number of blades.

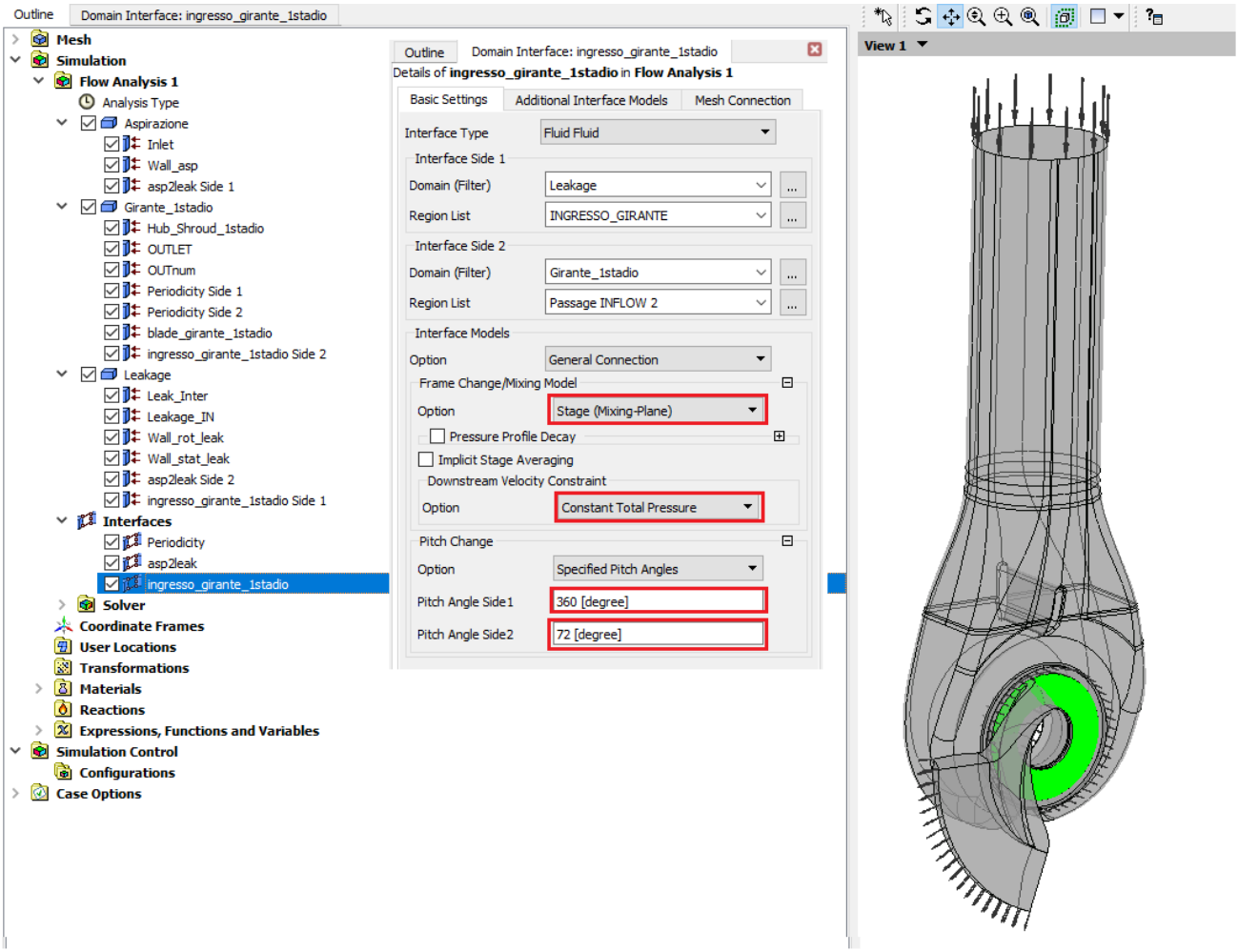

Figure 8 : Setting Stage (Mixing-Plane) Interface

COPY COMPLIANT to the original document resident on the computer system at the time of printing

- Set the Rotational Periodicity Interface at impeller vane as shown in Figure 9.

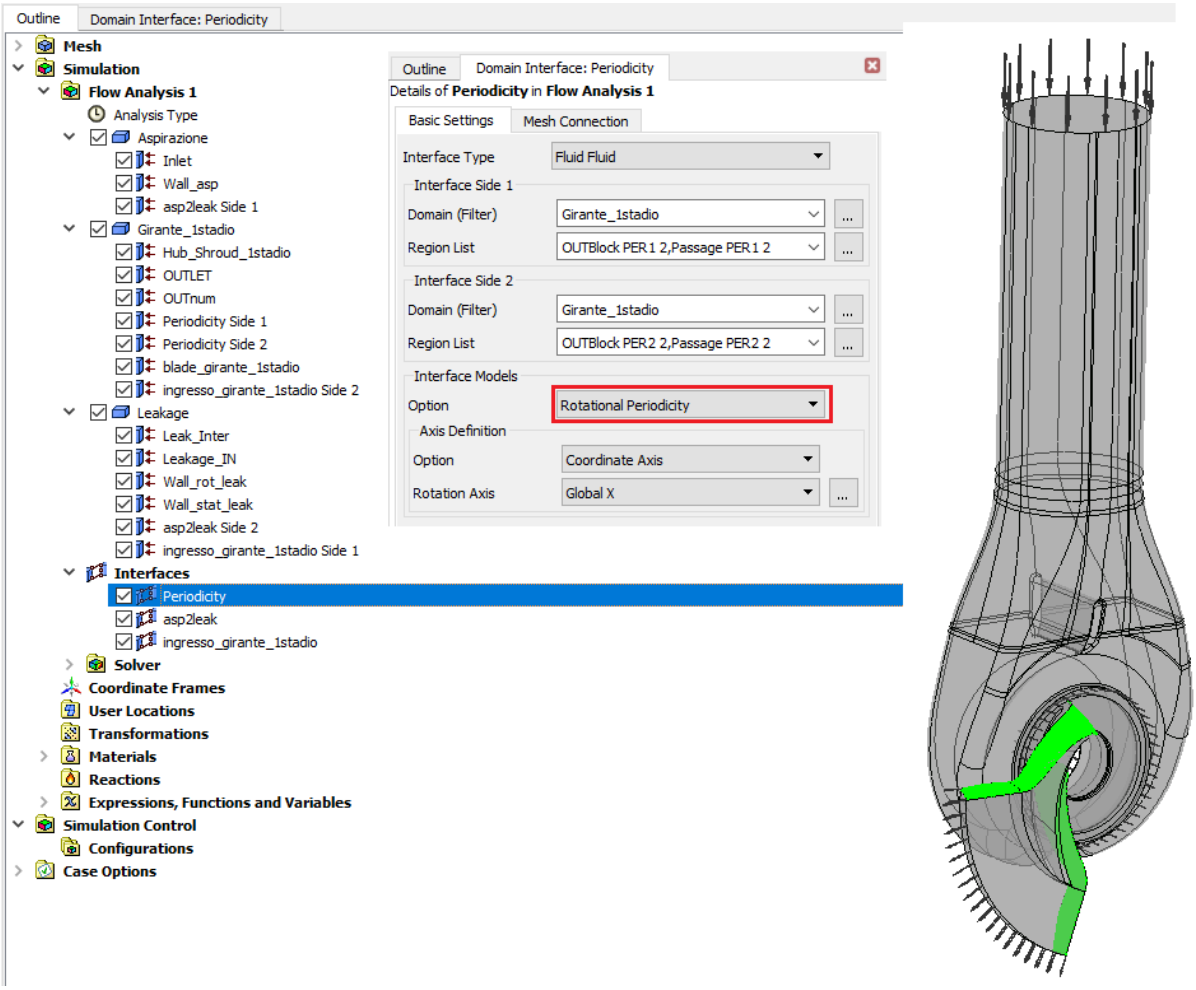

Figure 9 : Setting Rotational Periodicity Interface

COPY COMPLIANT to the original document resident on the computer system at the time of printing

At the end of these first steps the domain of the pump will assume the following configuration as shown in Figure 10:

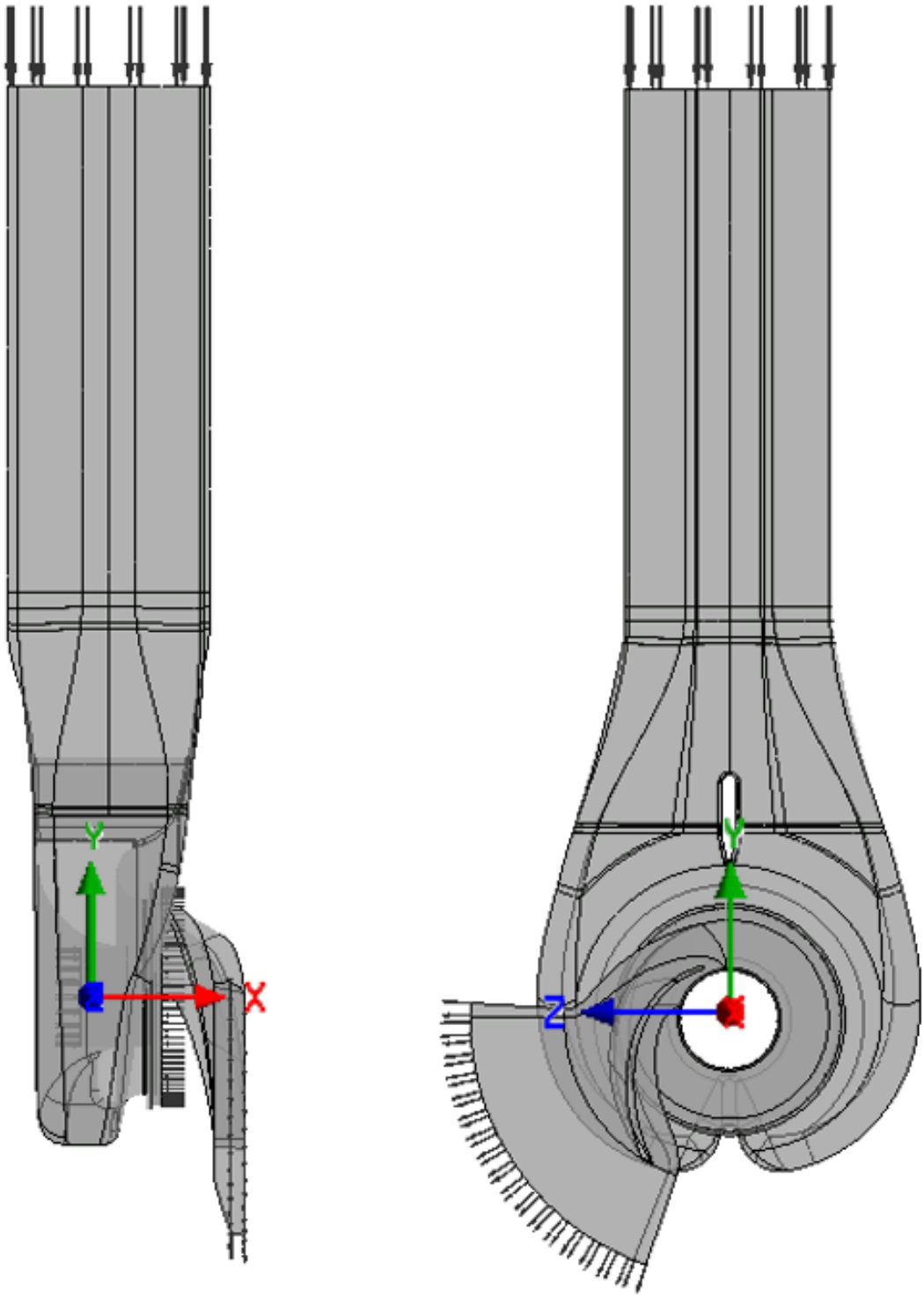

Figure 10 : Boundary Condition applied on pump domain

COPY COMPLIANT to the original document resident on the computer system at the time of printing

Annex B: Pump type (*API STANDARD 610)*

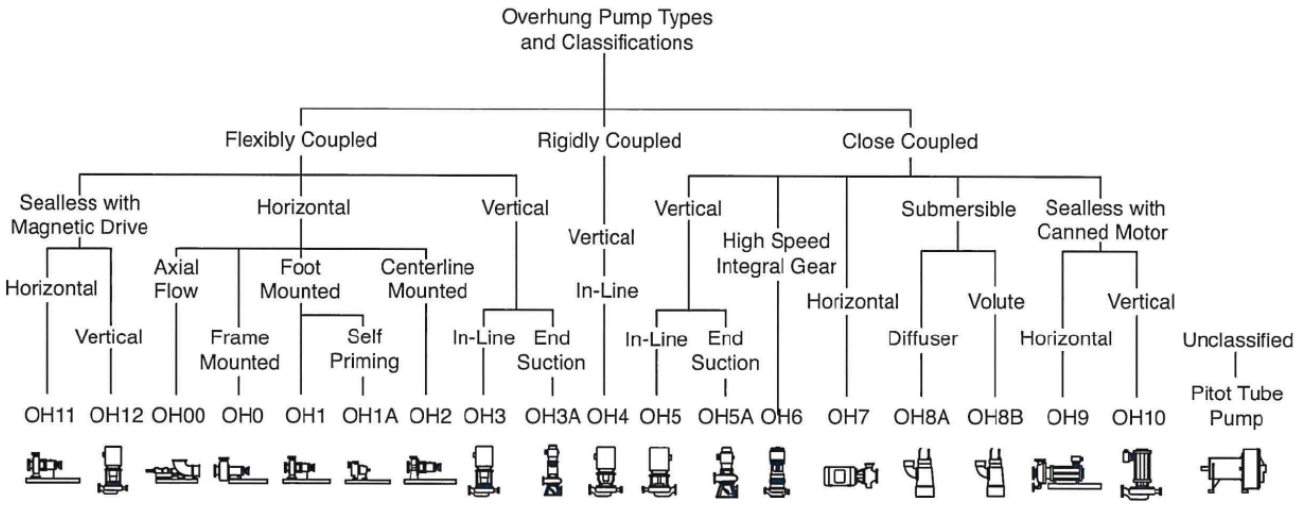

Figure 11 : Overhung pumps

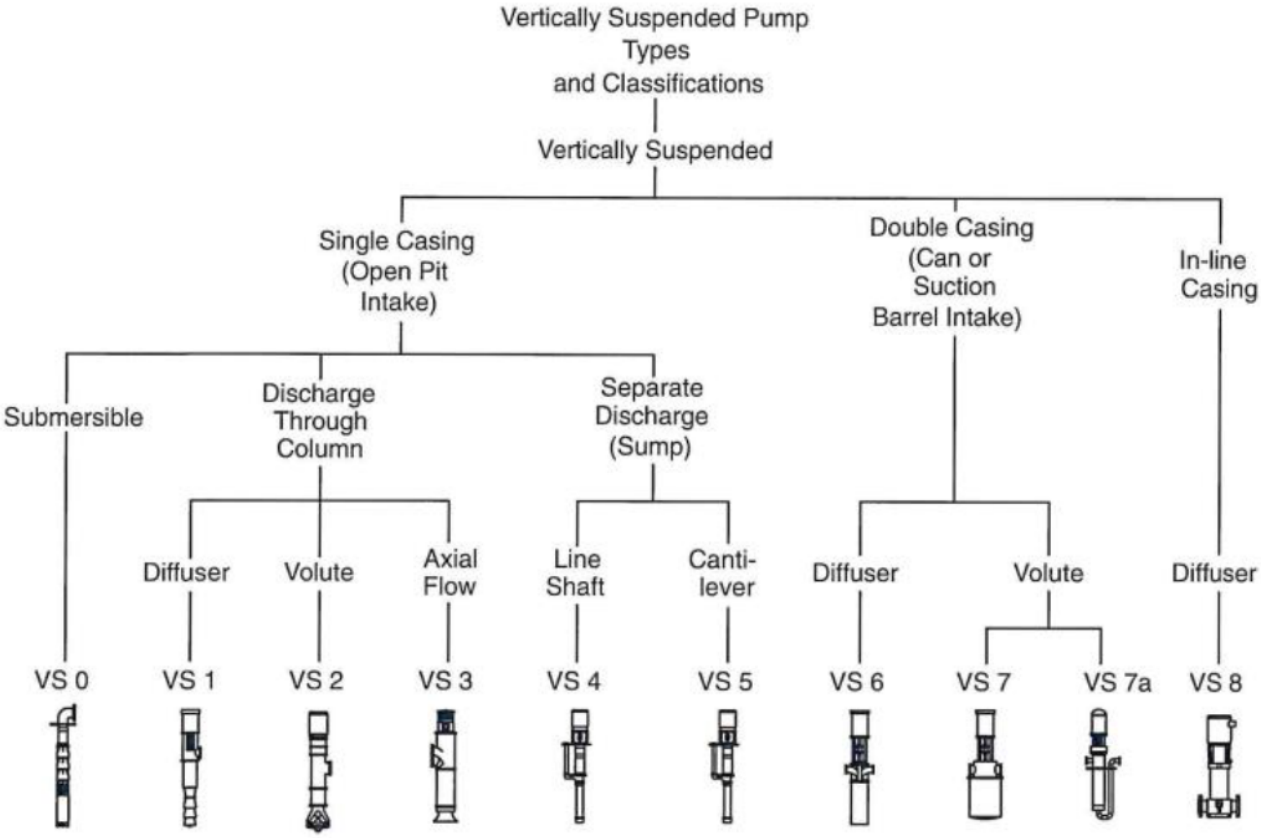

Figure 12 : Vertically suspended pumps

COPY COMPLIANT to the original document resident on the computer system at the time of printing

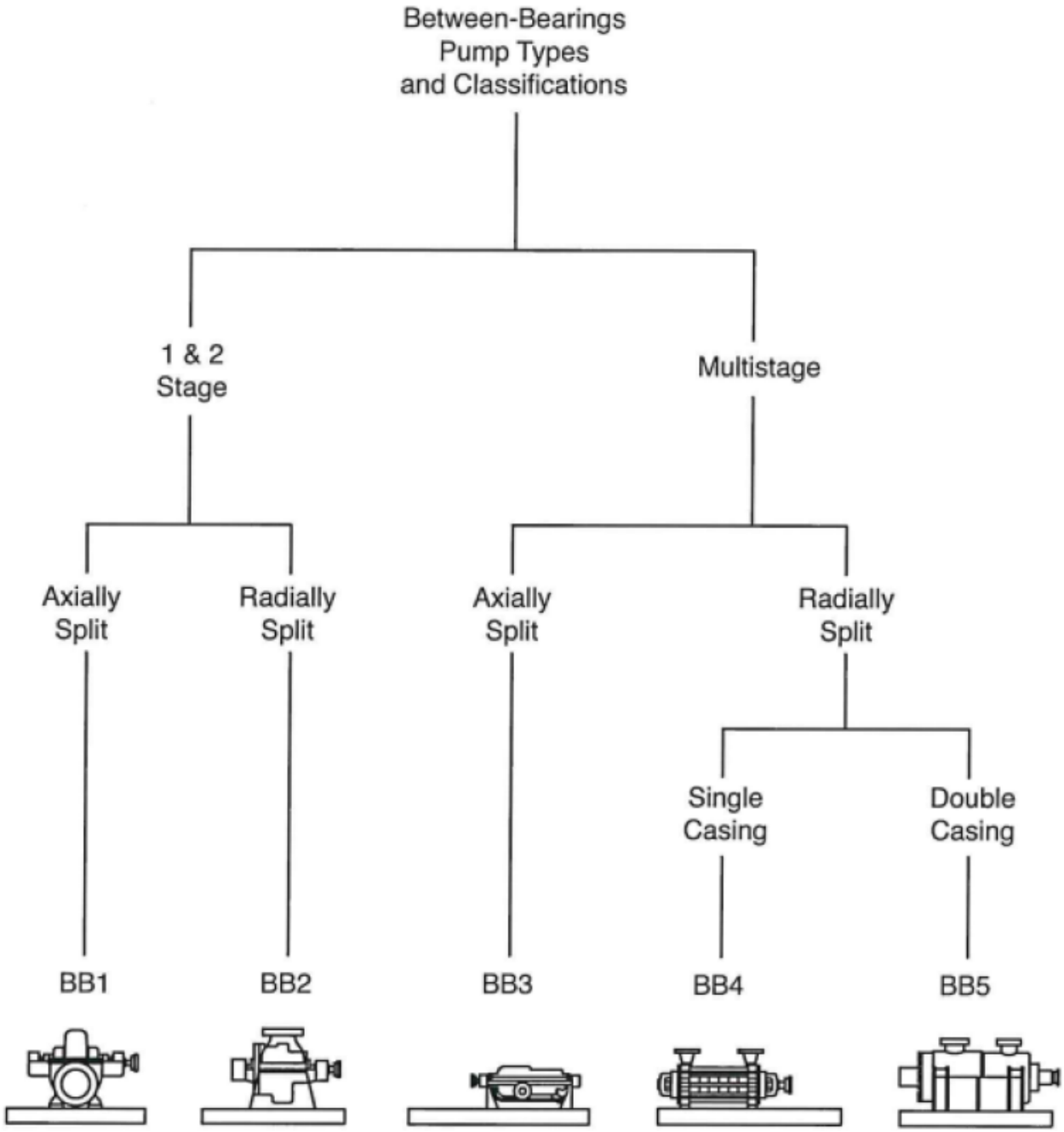

Figure 13 : Between bearings pumps

COPY COMPLIANT to the original document resident on the computer system at the time of printing

Annex C

Water state diagram:

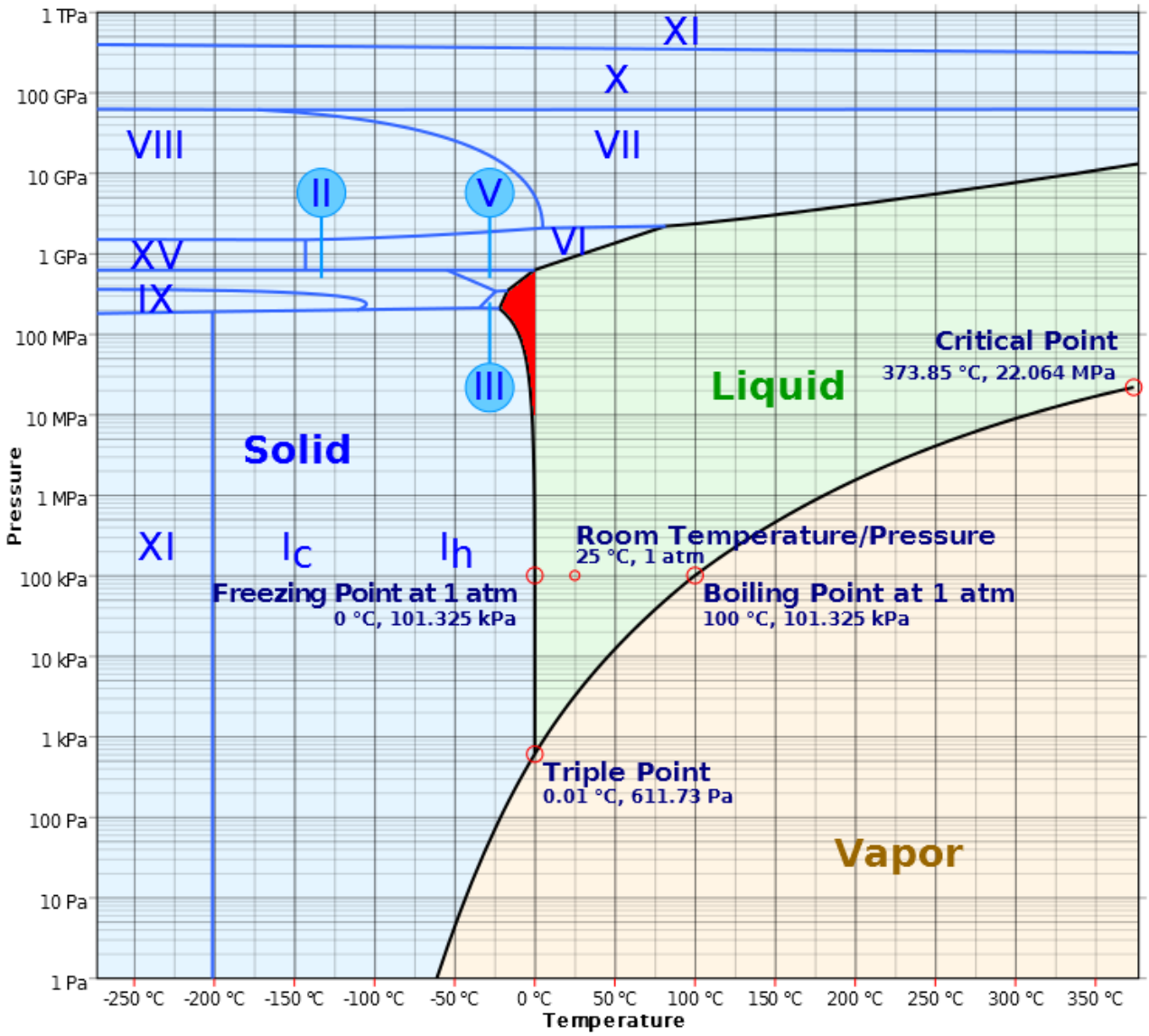

COPY COMPLIANT to the original document resident on the computer system at the time of printing

Table of thermophysical properties of water in saturation conditions:

DITEC	PROPRIETÀ TERMOFISICHE DELL'ACQUA ALLA SATURAZIONE	TAB. 10

t Temperatura	μ Viscosità dinamica	*PEDICI:*
p Pressione	ν Viscosità cinematica	l liquido saturo
ρ Densità	a Diffusività termica	v vapore saturo secco
c Calore specifico a p=cost	Pr Numero di Prandtl	
β Coefficiente volumetrico di dilatazione termica	σ Tensione superficiale	
k Conducibilità termica	Δh_{lv} Entalpia di passaggio di stato	

t	p	ρ_l	ρ_v	c_{pl}	c_{pv}	β_l	β_v	k_l	k_v	μ_l	μ_v	ν_l	ν_v	a_l	a_v	Pr_l	Pr_v	σ	Δh_{lv}
°C	bar	kg/m³		kJ/kgK		10^{-3} 1/K		10^{-3} W/mK		10^{-6} kg/m s		10^{-6} m²/s		10^{-6} m²/s				10^{-3} N/m	kJ/kg
0.01	0.006117	999.78	0.004855	4.229	1.868	-0.08044	3.672	561.0	17.07	1792	9.216	1.792	1898	0.1327	1883	13.51	1.008	75.65	2500.5
10.00	0.012281	999.69	0.009405	4.188	1.874	0.08720	3.548	580.0	17.62	1306	9.461	1.307	1006	0.1385	999.8	9.434	1.006	74.22	2476.9
20.00	0.023388	998.19	0.01731	4.183	1.882	0.2089	3.435	598.4	18.23	1002	9.727	1.004	562.0	0.1433	559.6	7.005	1.004	72.74	2453.3
30.00	0.042455	995.61	0.03040	4.183	1.892	0.3050	3.332	615.4	18.89	797.7	10.01	0.8012	329.3	0.1478	328.3	5.422	1.003	71.20	2429.7
40.00	0.073814	992.17	0.05121	4.182	1.904	0.3859	3.240	630.5	19.60	653.2	10.31	0.6584	201.3	0.1519	200.9	4.333	1.002	69.60	2405.9
50.00	0.12344	987.99	0.08308	4.182	1.919	0.4572	3.156	643.5	20.36	547.1	10.62	0.5537	127.8	0.1558	127.7	3.555	1.001	67.95	2381.9
60.00	0.19932	983.16	0.13030	4.183	1.937	0.5222	3.083	654.3	21.18	466.6	10.93	0.4746	83.91	0.1591	83.92	2.983	1.000	66.24	2357.6
70.00	0.31176	977.75	0.19823	4.187	1.958	0.5827	3.018	666.3	22.07	404.1	11.26	0.4132	56.80	0.1620	56.85	2.551	0.9992	64.49	2333.1
80.00	0.47373	971.79	0.29336	4.194	1.983	0.6403	2.964	670.0	23.01	354.5	11.59	0.3648	39.51	0.1644	39.56	2.219	0.9989	62.68	2308.1
90.00	0.70117	965.33	0.42343	4.204	2.011	0.6958	2.919	675.3	24.02	314.5	11.93	0.3258	28.17	0.1664	28.20	1.958	0.9989	60.82	2282.7
100.00	1.0132	958.39	0.59750	4.217	2.044	0.7501	2.884	679.1	25.09	281.9	12.27	0.2941	20.53	0.1680	20.55	1.750	0.9994	58.92	2256.7
110.00	1.4324	951.00	0.82601	4.232	2.082	0.8038	2.860	681.7	26.24	254.8	12.61	0.2680	15.27	0.1694	15.26	1.582	1.001	56.97	2229.9
120.00	1.9848	943.16	1.12081	4.249	2.126	0.8576	2.846	683.2	27.46	232.2	12.96	0.2462	11.56	0.1705	11.53	1.444	1.003	54.97	2202.4
130.00	2.7002	934.88	1.4954	4.267	2.176	0.9123	2.844	683.7	28.76	213.0	13.30	0.2278	8.894	0.1714	8.840	1.329	1.006	52.94	2174.0
140.00	3.6119	926.18	1.9647	4.288	2.233	0.9683	2.855	683.3	30.14	196.6	13.65	0.2123	6.946	0.1720	6.869	1.234	1.011	50.86	2144.7
150.00	4.7572	917.06	2.5454	4.312	2.299	1.026	2.878	682.1	31.59	182.5	13.99	0.1991	5.496	0.1725	5.399	1.154	1.018	48.75	2114.1
160.00	6.1766	907.50	3.2564	4.339	2.374	1.087	2.916	680.0	33.12	170.3	14.34	0.1877	4.402	0.1727	4.285	1.087	1.027	46.60	2082.3
170.00	7.9147	897.51	4.1181	4.369	2.460	1.152	2.969	677.1	34.74	159.6	14.68	0.1779	3.565	0.1727	3.430	1.030	1.039	44.41	2049.2
180.00	10.019	887.06	5.1539	4.403	2.558	1.221	3.039	673.4	36.44	150.2	15.02	0.1693	2.915	0.1724	2.764	0.9822	1.055	42.20	2014.5
190.00	12.542	876.15	6.3896	4.443	2.670	1.296	3.128	668.8	38.23	141.8	15.37	0.1619	2.405	0.1718	2.241	0.9423	1.073	39.95	1978.2
200.00	15.536	864.74	7.8542	4.489	2.797	1.377	3.238	663.4	40.10	134.4	15.71	0.1554	2.001	0.1709	1.825	0.9093	1.096	37.68	1940.1
210.00	19.062	852.82	9.5807	4.542	2.943	1.467	3.372	657.1	42.07	127.7	16.06	0.1497	1.676	0.1696	1.492	0.8825	1.123	35.39	1900.0
220.00	23.178	840.34	11.607	4.604	3.109	1.567	3.534	649.8	44.15	121.6	16.41	0.1447	1.414	0.1680	1.224	0.8614	1.155	33.08	1857.8
230.00	27.951	827.25	13.976	4.675	3.299	1.680	3.729	641.4	46.35	116.0	16.76	0.1403	1.199	0.1659	1.005	0.8456	1.193	30.75	1813.1
240.00	33.447	813.52	16.739	4.759	3.519	1.808	3.963	632.0	48.70	110.9	17.12	0.1363	1.023	0.1633	0.8268	0.8351	1.237	28.40	1765.7
250.00	39.736	799.07	19.956	4.857	3.772	1.955	4.245	621.4	51.23	106.2	17.49	0.1329	0.8766	0.1601	0.6804	0.8299	1.288	26.05	1715.4
260.00	46.894	783.83	23.700	4.973	4.068	2.127	4.586	609.4	53.98	101.7	17.88	0.1298	0.7542	0.1564	0.5598	0.8302	1.347	23.70	1661.9
270.00	54.999	767.68	28.061	5.111	4.418	2.331	5.002	596.1	57.04	97.56	18.27	0.1271	0.6512	0.1519	0.4602	0.8365	1.415	21.35	1604.6
280.00	64.132	750.52	33.152	5.279	4.836	2.578	5.519	581.4	60.52	93.57	18.70	0.1247	0.5640	0.1467	0.3775	0.8496	1.494	19.00	1543.1
290.00	74.380	732.16	39.119	5.485	5.345	2.884	6.170	565.2	64.59	89.72	19.15	0.1225	0.4896	0.1407	0.3089	0.8708	1.585	16.68	1476.7
300.00	85.838	712.41	46.154	5.746	5.981	3.273	7.010	547.7	69.49	85.96	19.65	0.1207	0.4257	0.1338	0.2517	0.9018	1.691	14.37	1405.7
310.00	98.605	690.95	54.525	6.084	6.799	3.785	8.127	529.0	75.61	82.22	20.20	0.1190	0.3706	0.1258	0.2040	0.9457	1.817	12.10	1325.8
320.00	112.79	667.36	64.615	6.542	7.898	4.491	9.674	509.4	83.59	78.46	20.84	0.1176	0.3226	0.1167	0.1638	1.008	1.969	9.875	1238.5
330.00	128.52	641.00	77.013	7.201	9.458	5.530	11.94	489.2	94.48	74.58	21.60	0.1163	0.2805	0.1060	0.1297	1.098	2.163	7.713	1140.3
340.00	145.94	610.77	92.691	8.238	11.87	7.210	15.55	468.6	110.2	70.45	22.55	0.1153	0.2433	0.09313	0.1002	1.239	2.428	5.636	1027.5
350.00	165.21	574.69	113.48	10.13	16.11	10.37	22.12	447.6	134.6	65.88	23.81	0.1146	0.2098	0.07692	0.07365	1.490	2.849	3.675	893.03
360.00	186.55	528.10	143.64	14.69	25.80	18.30	37.71	427.2	178.0	60.39	25.71	0.1144	0.1790	0.05507	0.04804	2.077	3.726	1.886	721.06
370.00	210.30	453.13	200.29	41.96	78.75	68.20	126.7	428.0	299.4	52.26	29.57	0.1153	0.1477	0.02251	0.01898	5.122	7.780	0.3948	450.42
373.00	220.55	322.00	322.00	∞	∞	∞	∞	1419	1419	43.16	43.16	0.1341	0.1341	0.00000	0.00000	∞	∞	0.0000	0.0000

COPY COMPLIANT to the original document resident on the computer system at the time of printing